LX1516 - 180 CFX - DFC HEAD SET - SILVER
LX1517 - 180 CFX - DFC HEAD SET - RED
LX1518 - 180 CFX - DFC HEAD SET - BLACK

STEP 1 (2 SET)

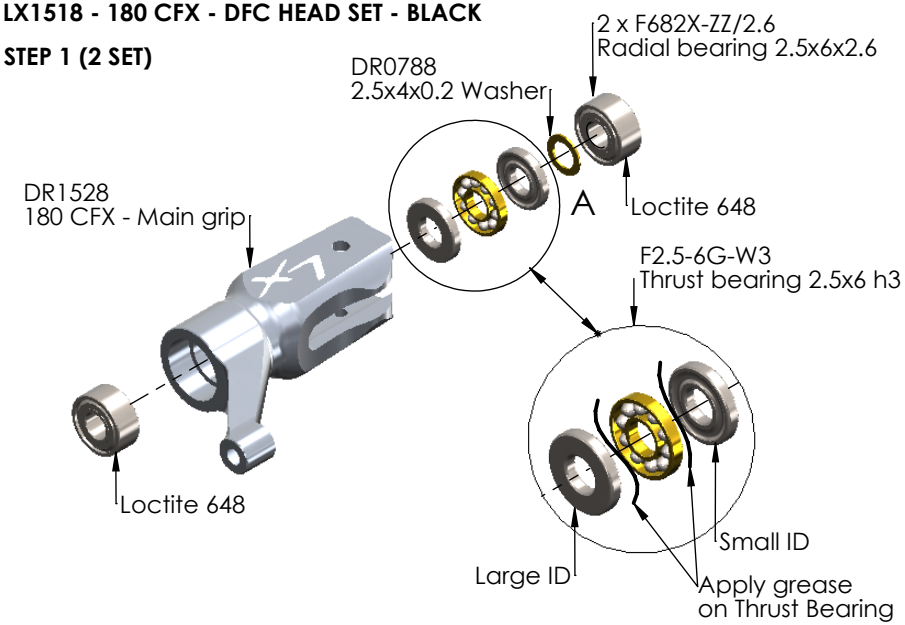

STEP 2 (2 SET)

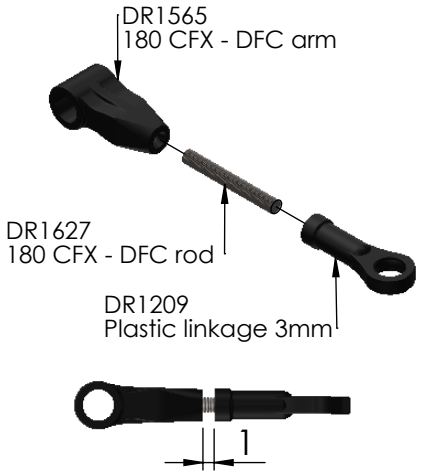

STEP 3

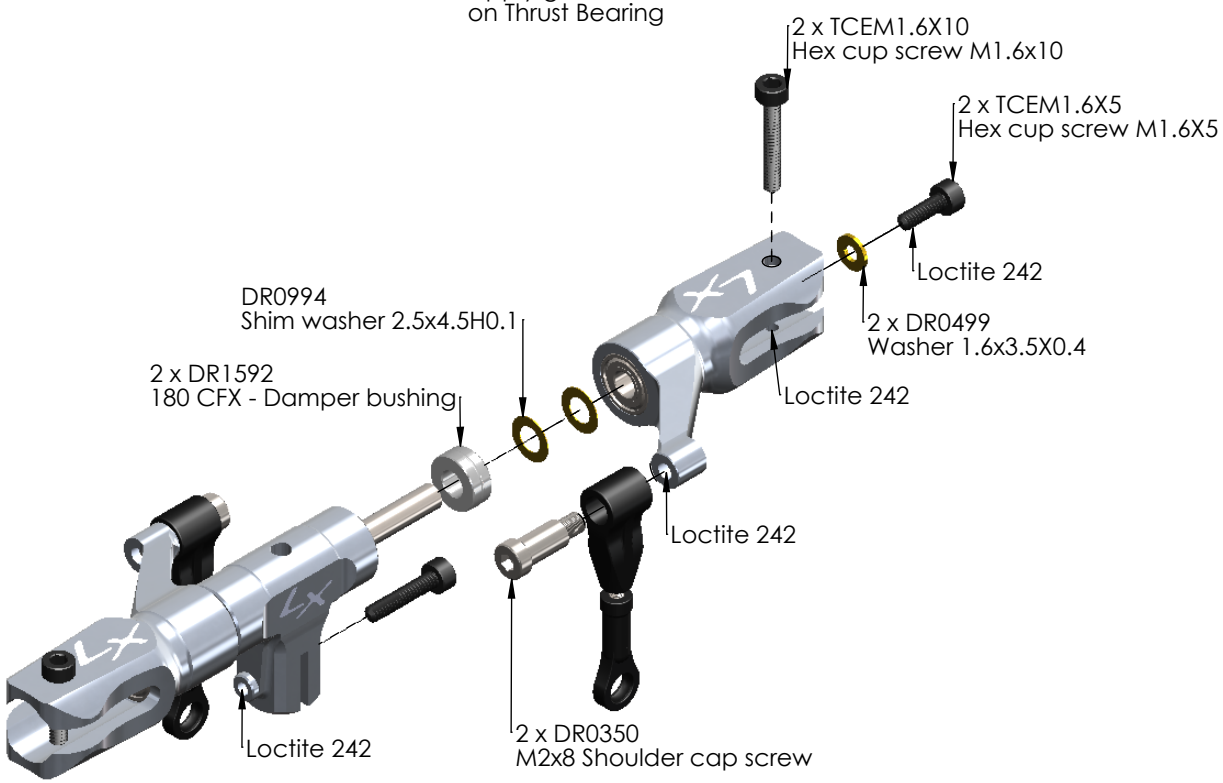

ASSEMBLY VIEW

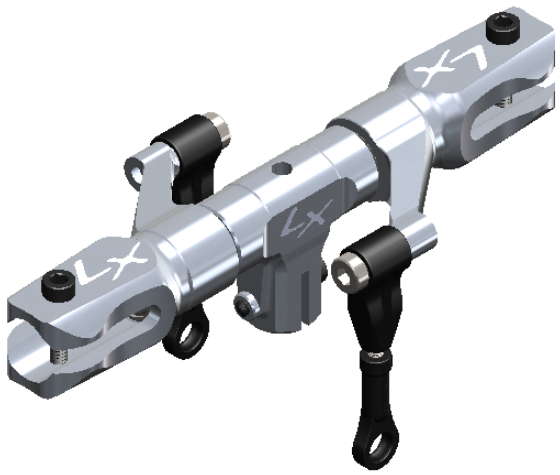

NOTE

HELI INNOVATIONS