LX0820 130 X - CARBON TAIL PUSH ROD X STD SERVO COMBO - SILVER
LX0821 130 X - CARBON TAIL PUSH ROD X STD SERVO COMBO - RED

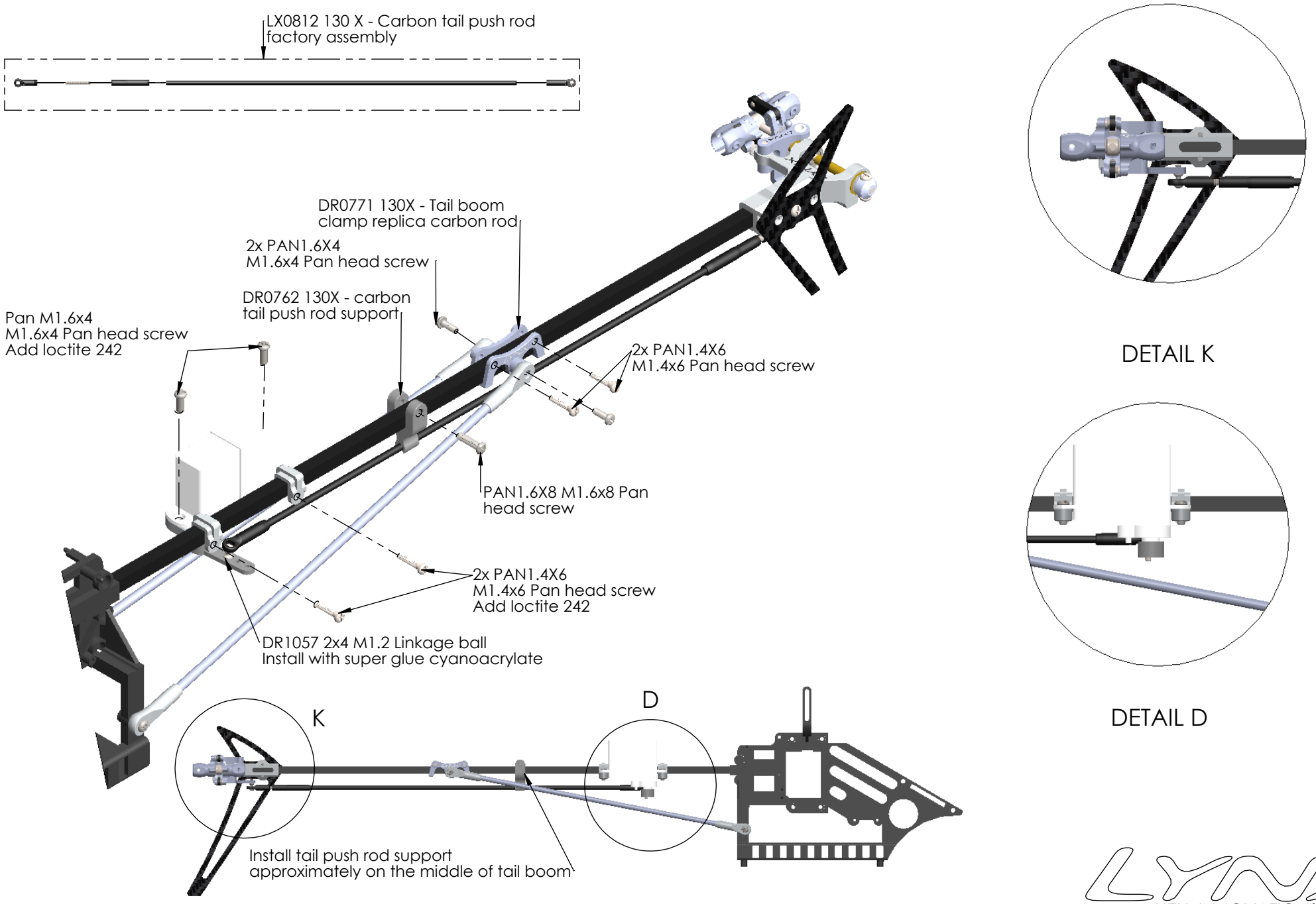

DETAIL K

DETAIL D

LYNX
HELI INNOVATIONS